NO.	REV. BY	DESCRIPTION	DATE

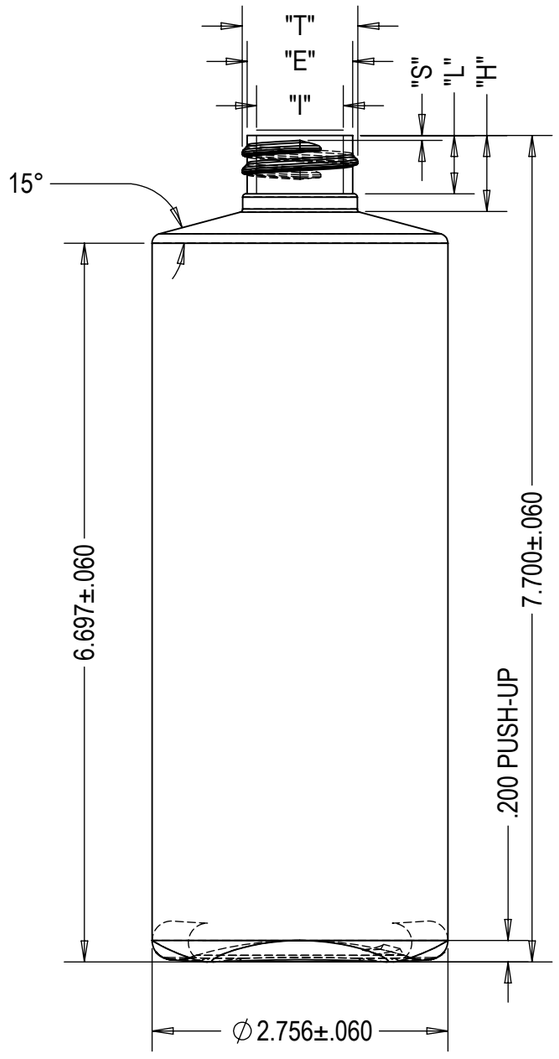

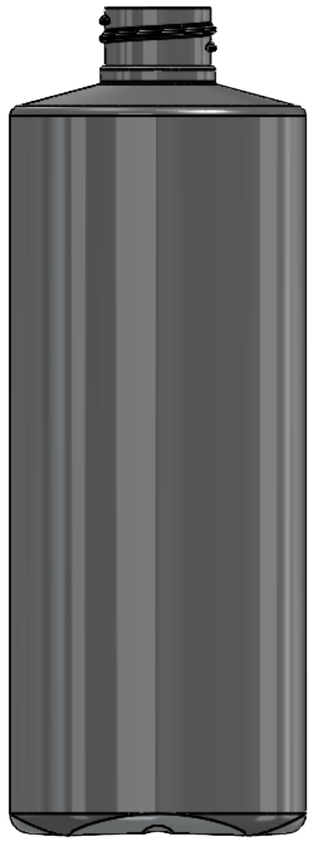

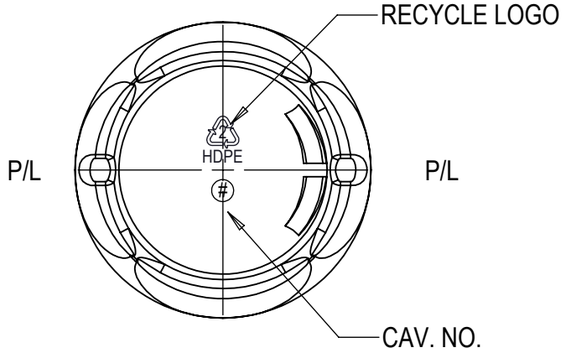

BOTTLE SPECIFICATIONS			
MATERIAL: HDPE		FILL CAPACITY:	591 ml ± 13ml
WEIGHT: 40g ±3g		O/F CAPACITY:	632 ml ± 13ml
NECK SPECIFICATIONS			
FINISH	28-410	"L" DIM.	.544 ± .015
STYLE	M	"W" DIM.	N/A
"T" DIM.	∅ 1.078 ± .010	HELIX ANG.	N/A
"E" DIM.	∅ .984 ± .010	T.P.I	6
"I" DIM.	∅ .808 ± .010	PITCH	.167
BEAD DIA.	N/A	CUTTER DIA.	N/A
"H" DIM.	.708 ± .015	THREAD TURNS	1.5
"S" DIM.	.046 ± .015		

Unique Blowmoulding Inc.

DWN. BY: A.P	DATE:04/21/22	DESCRIPTION: 20 OZ CYLINDER
APR. BY:	DATE:	DRAWING NO.: MINESH
SCALE: 2:3		